DWG. NO.	SHT	REV
SL6131-OS	1	A

THIS DRAWING HAS BEEN GENERATED BY A CAD SYSTEM. CHANGES SHALL ONLY BE INCORPORATED AS DIRECTED BY THE DESIGN ACTIVITY. DO NOT REVISE MANUALLY.

REVISIONS

REV.	DESCRIPTION	ECO	DATE	APPROVED
A	INITIAL RELEASE	I.R.	12/20/15	P.T

RoHS 2002/95/EC

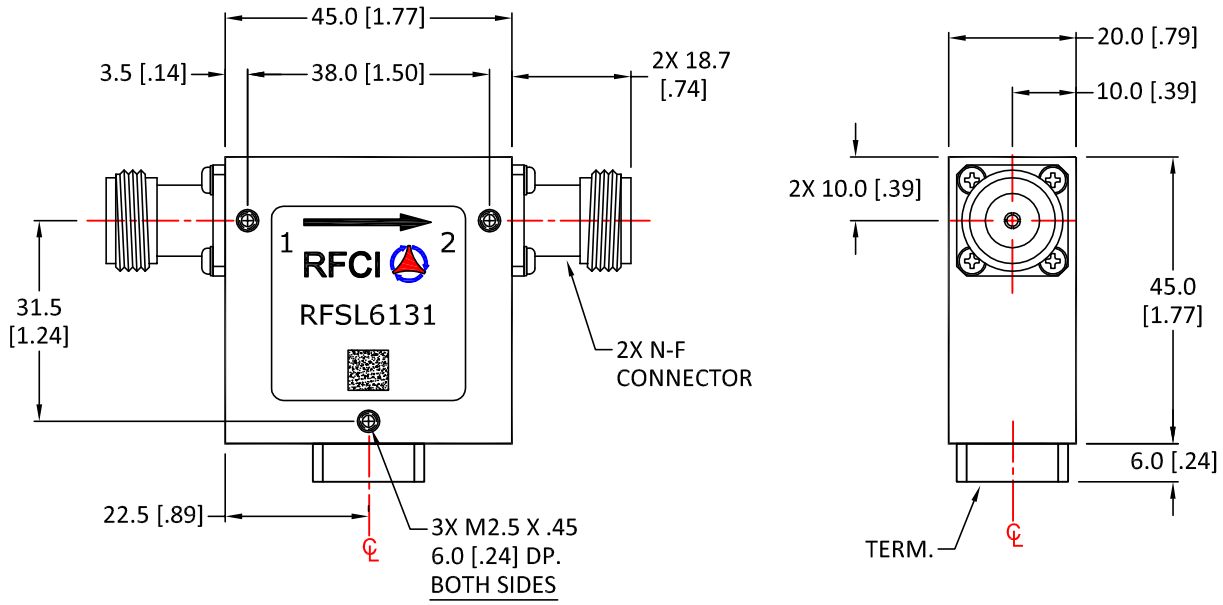

Specifications

Parameter	Minimum	Typical	Maximum
Frequency Range (MHz)	570		670
Insertion Loss (dB)		< .40	.50
Isolation (dB)	18	> 20	
Return Loss (dB)	18	> 20	

Notes:
1. Typical Values Represent Mid-Band Performance @ +23 °C.
2. Isolator Flange held to +85°C; 30 Minute maximum Duration.

Power & Temperature Ratings

Parameter	Maximum
Forward PWR Peak/AVG	2.0K/250 Watts
Reverse Power CW	20 Watts
Termination Rating (See Note 2)	20 Watts
Operating Temperature	-20 to +85° C
Storage Temperature	-40 to +95° C

20W N-f ISOLATOR MODEL: RFSL6131

UNLESS OTHERWISE SPECIFIED
ALL DIMENSIONS ARE IN MILLIMETERS [INCHES]:

TOLERANCES ARE:
1 PLACE DECIMAL ±.2 [±.01] | ANGULAR: ±1.0°
2 PLACE DECIMAL ±.10 [±.004] | SURFACE ROUGHNESS 16√

REMOVE ALL BURRS AND BREAK SHARP EDGES.
SURFACE TEXTURE TO BE IN ACCORDANCE WITH LATEST ANSI B46.1
DIMENSIONING & TOLERANCING IN ACCORDANCE WITH LATEST ANSI Y14.5

PROPRIETARY NOTE: "THE INFORMATION CONTAINED ON THIS DOCUMENT IS CONSIDERED TO BE CONFIDENTIAL MATERIAL PROPRIETARY TO RF CIRCULATOR ISOLATOR Inc. (RFCI) AND IS PROVIDED SOLELY FOR INFORMATION PURPOSES.
THIS INFORMATION SHALL NOT BE USED BY ANYONE OTHER THAN RFCI TO DESIGN OR CONSTRUCT ANY OF THE ITEMS DEPICTED, NOR SHALL IT BE DISCLOSED, DUPLICATED, OR COPIED FOR ANY PURPOSE, NOR MADE AVAILABLE TO ANY THIRD PARTY WITHOUT THE PRIOR WRITTEN CONSENT OF A RFCI OFFICIAL."

DO NOT SCALE DRAWING

THIRD ANGLE PROJECTION

APPROVALS	DATE
DRAWN BY:	
CHECKED BY:	
DESIGN BY:	
ENGINEER BY:	
MFG. ENGR.	
Q.A.	
PROG. MGMT/MKT	

RFCI

OUTLINE/SPECS

SIZE	CAGE NO.	DWG NO.	REV.
A		SL6131-OS	A

SCALE: FULL | SHEET 1 OF 1